RESEARCH ARTICLE OPEN ACCESS

Solid Edge 3D Model of Synthesized Eight Link Gear Variable Topology Mechanism

H. M. Naveen[*], Shrinivas S. Balli[**] and Umesh M. Daivagna[***]

[*] (Assistant Professor, Department of Mechanical Engineering, RYM Engineering College, Ballari, Karnataka, India, Email: kasinathnaveen@gmail.com)
[**] (Professor, Department of Mechanical Engineering, Basaveshwar Engineering College, Bagalkot, Karnataka, India)
[***] (Professor, Department of Mechanical Engineering, Ballari Institute of Technology, Ballari, Karnataka, India)

****

Abstract

The paper brings out a 3D model of synthesized eight link gear variable topology mechanism. The synthesized planar mechanism will be modeled considering parallel plane mechanism concept. Solid Edge software will be considered in the process of model creation. The presentation helps the designer to visualize how practically a mechanism can look virtually when fabricated.

Keywords: **Solid Edge 3D Model, Variable Topology Mechanism, Eight Link Gear**

****

1. INTRODUCTION

The fundamental aspect in kinematics is synthesis of mechanism. Synthesis can be classified as dimensional, type and number synthesis to perform various the tasks. Synthesis and Analysis are the two major categories of design process of mechanism. Synthesis process involves devising a mechanism to perform the desired task and analysis process involves functioning of the mechanism. When a mechanism is synthesized with some parameters, virtual model of the mechanism is built to study its working aspects. As complexity arises in building the real mechanism and testing, this calls for software based study of the mechanisms.

Solid Edge is a platform, where in, the synthesized mechanism can be built modeled and thus, the complete mechanism can be visualized virtually. This is a Computer Aided Design (CAD) program used for modeling of mechanisms, create drawings and animate the mechanism.

2. LITERATURE REVIEW

This paragraph summarizes the literature review on variable topology method suggesting the footing of the approach adapted by different people working in this area. Balli and Chand [1] intimated that, an analytical method can be used to synthesize five bar mechanism with variable topology. The work was carried out for movement between extreme positions of the mechanism for function generation. Balli and Chand [2] proposed the complex number method and utilized it to synthesize the mechanism having five links for motion and path generation tasks with variable topology for movement between extreme positions. Balli and Chand [3]

suggested an analytical method to synthesize planar seven link mechanism with variable topology for motion between two dead centers. Gadad *et al.,* [4] focused on synthesis of planar seven link mechanism using triad and dyad with variable topology for the task function generation. Daivagna and Balli [5] dealt with synthesis process of an off-set five link slider mechanism with variable topology. Ren-Chung Soong *et al.,* [6] applied a geared seven-bar mechanism for mechanical forming presses. Daivagna and Balli [7] synthesized a variable topology seven-bar slider mechanism to have motion between two dead-center positions. Volken *et al.,* [8] presented an analysis and synthesis method for a geared four-bar mechanism. Daivagna and Balli [9] worked on the synthesis of variable topology mechanism with five-bar slider for finitely separated positions. Prashant and Balli [10] reviewed the works on variable topology method. H. M. Naveen *et al.,* [11] dealt with synthesis of eight link gear mechanism for motion generation. H. M. Naveen *et al.,* [12] dealt with synthesis of In-Line Ten Link Gear Slider Mechanism of Variable Topology. Prashant and Balli [13] synthesized a seven bar slider for limiting positions using variable topology. H. M. Naveen *et al.,* [14] presented the behavior of mechanism using linkage software. H. M. Naveen, Shrinivas S. Balli and Umesh M. Daivagna [15] dealt with the functional aspects of ten link gear slider mechanism. H. M. Naveen, Shrinivas S. Balli and Umesh M. Daivagna [16] worked on Phase III operating conditions in variable topology mechanism. H. M. Naveen, Shrinivas S. Balli and Umesh M. Daivagna [17] worked on alternative approaches in variable topology mechanisms. H. M. Naveen, Shrinivas S. Balli and Umesh M. Daivagna [18] dealt with transmission angles in eight link gear variable topology mechanism

3. MODELING OF SYNTHESIZED EIGHT LINK GEAR VARIABLE TOPOLOGY MECHANISM

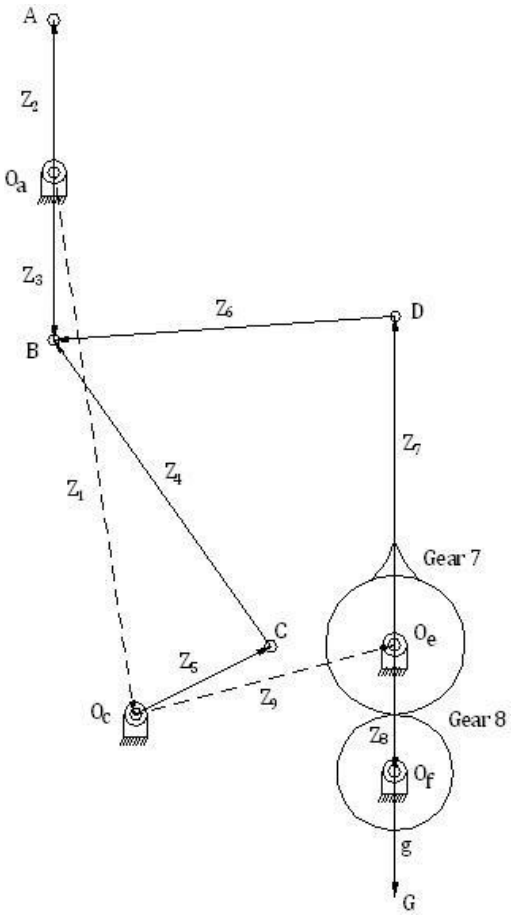

Fig. 1 Synthesized Eight Link Gear Mechanism

The Fig. 1 represents synthesized eight link gear mechanism. The synthesis process is dealt with and the determined dimensions of the mechanism are considered in the modeling process of the mechanism using solid Edge software [11].

The determined parameters of eight link gear mechanism are [11],

$|Z_1| = O_aO_c = 137.5$mm
$|Z_2| = O_aA = 38$ mm
$|Z_3| = AB = 80.1$ mm
$|Z_4| = CB = 92.0$ mm
$|Z_5| = O_cC = 35.4$ mm
$|Z_6| = DB = 85.3$ mm
$|Z_7| = O_eD = 82$ mm
$|Z_8| = O_fO_e = 32$ mm
$|Z_9| = O_cO_f = 69.0$ mm

A. Modeling of Synthesized Eight Link Gear Variable Topology Mechanism in Single Plane

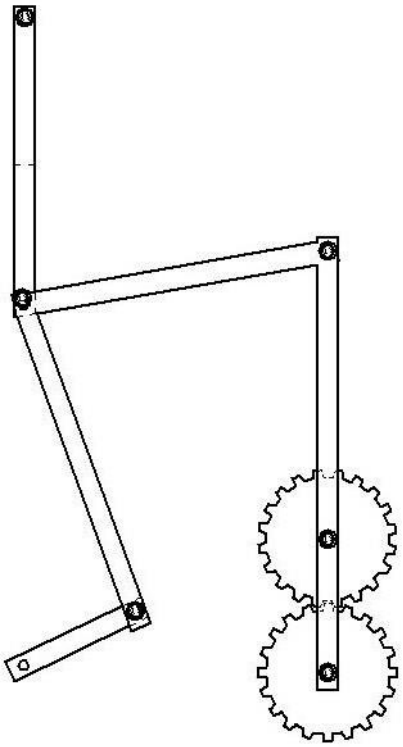

Fig. 2 Synthesized Eight Link Gear Mechanism Model in Solid Edge in 2D Representation

The fig. 2 represents the modeling of the synthesized eight link gear mechanism in solid edge software in two dimensions. This pictorial view resembles the mechanism which will be utilized in positioning of the links and orientation of the mechanism.

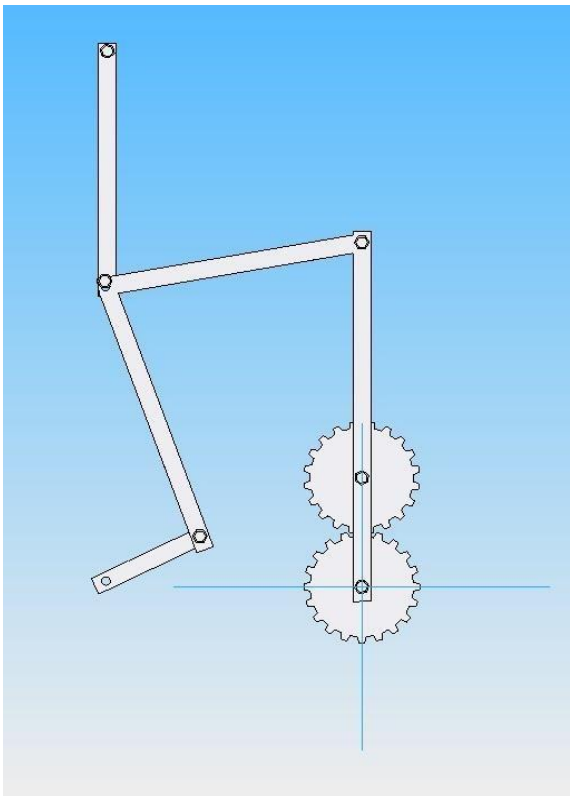

Fig. 3 Synthesized Eight Link Gear Mechanism Model in Solid Edge in Front View Representation

The fig. 3 shows the model of the synthesized eight link gear mechanism in solid edge software in two dimensions. This pictorial view represents the solid view of the mechanism and aids to the look of solid links used in manufacturing the mechanism. The solid view can be considered to be made of materials like cast iron, aluminum, composites or wood as per the choice of the designer.

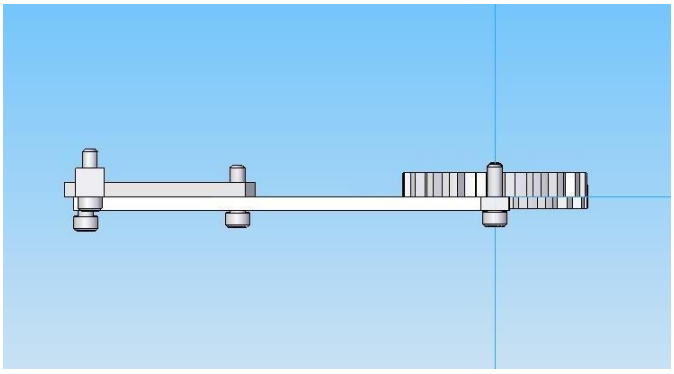

Fig. 4 Synthesized Eight Link Gear Mechanism Model in Solid Edge in Top View Representation

The fig. 4 shows the model of the synthesized eight link gear mechanism in solid edge software in top view. This pictorial view represents the solid view of the mechanism and aids to the look of mechanism from top and its orientation.

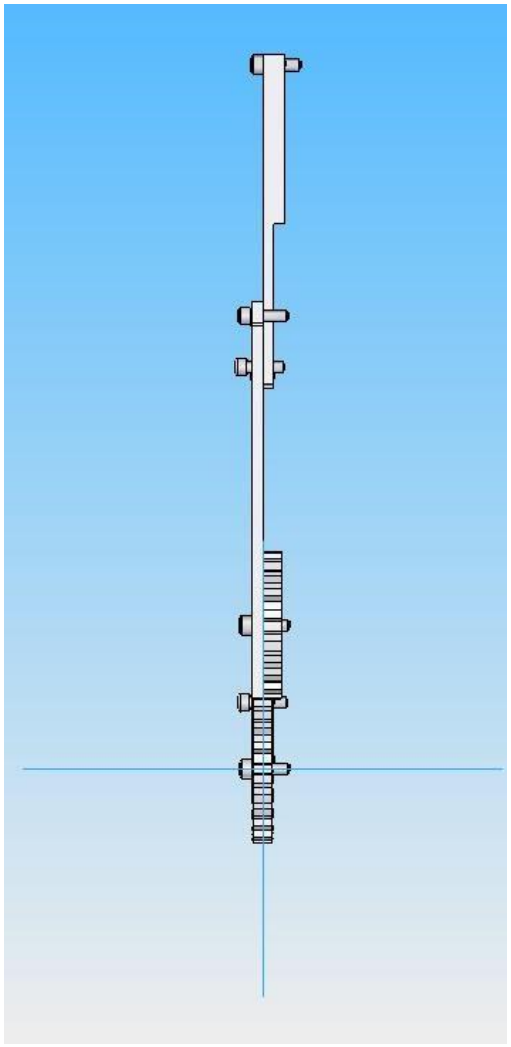

Fig. 5 Synthesized Eight Link Gear Mechanism Model in Solid Edge in Side View Representation

The fig. 5 shows the model of the synthesized eight link gear mechanism in solid edge software in side view. This pictorial view represents the solid view of the mechanism and aids to the look of mechanism from side view and its orientation.

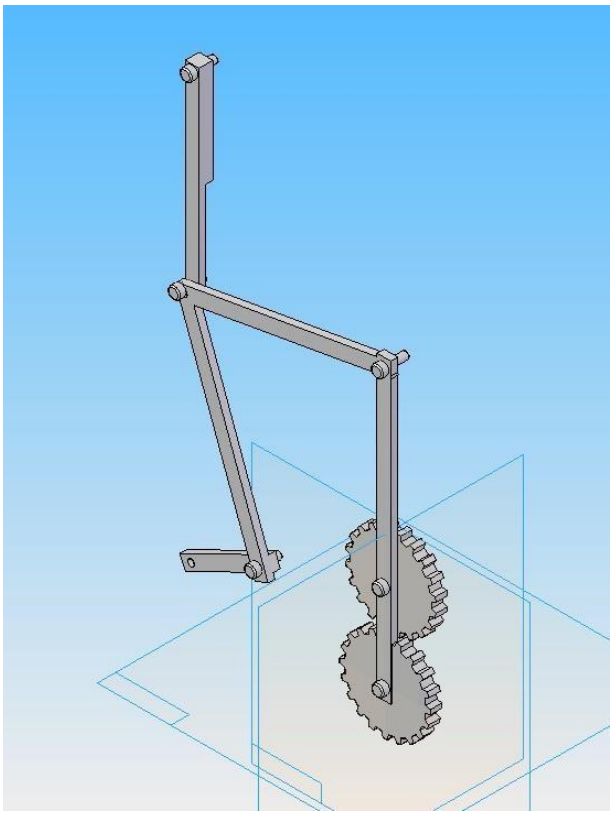

Fig. 6 Synthesized Eight Link Gear Mechanism Model in Solid Edge in Isometric Representation

The fig. 6 represents the model of the synthesized eight link gear mechanism in solid edge software in isometric view. This pictorial view represents the solid view of the mechanism and aids to the look of mechanism in three dimensions. This is one of the most useful view in which the complete assembly of the linkage can be seen and the study can be extended on the same.

B. Modeling of Synthesized Eight Link Gear Variable Topology Mechanism in Two Parallel Planes

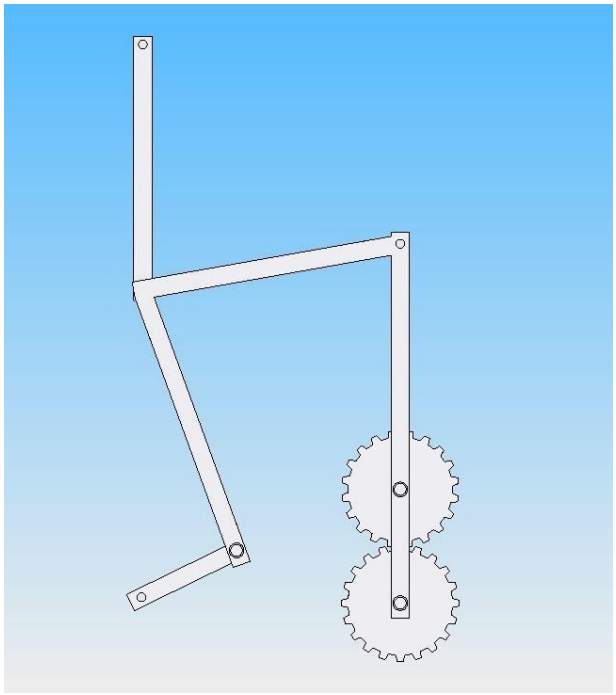

Fig. 7 Synthesized Eight Link Gear Mechanism Model in Two Parallel Planes and Front View Representation in Solid Edge

As represented in fig. 6 the synthesized mechanism is designed on a single plane and all the links lie on the same plane, hence it is named as a planar mechanism. If a plane parallel to the considered plane is assumed to have the replica of the same mechanism, then the two mechanisms on two parallel planes can be connected by a single shaft at revolute joints. This assembly of the mechanisms can be made to run by motors connected at inputs as defined by cranks, on one plane or different planes. This assembly is shown in fig. 7 in the form of front view of the mechanism assembly. The top view, side view, isometric view and wire frame model of the assembly is shown in figures 8-11 respectively.

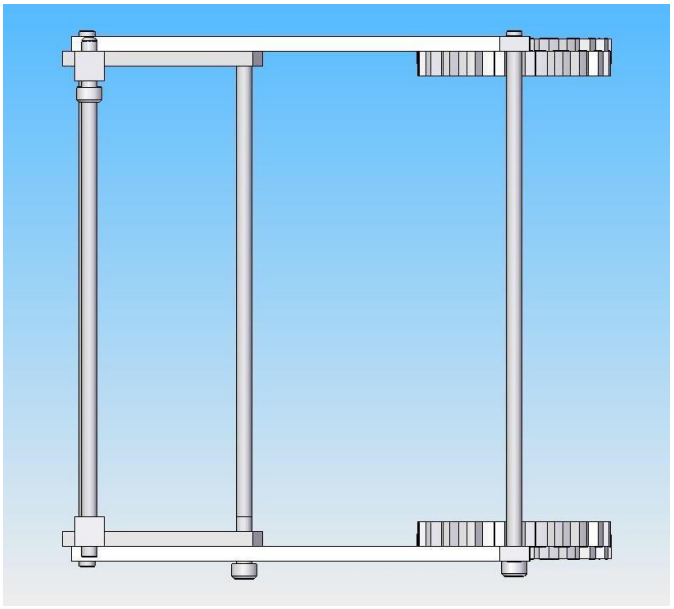

Fig. 8 Synthesized Eight Link Gear Mechanism Model in Two Parallel Planes and Top View Representation in Solid Edge

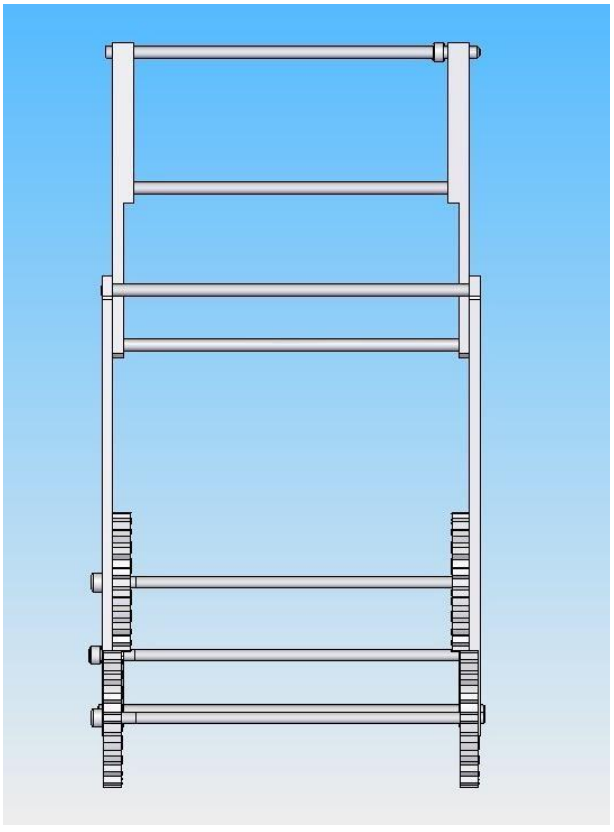

Fig. 9 Synthesized Eight Link Gear Mechanism Model in Two Parallel Planes and Side View Representation in Solid Edge

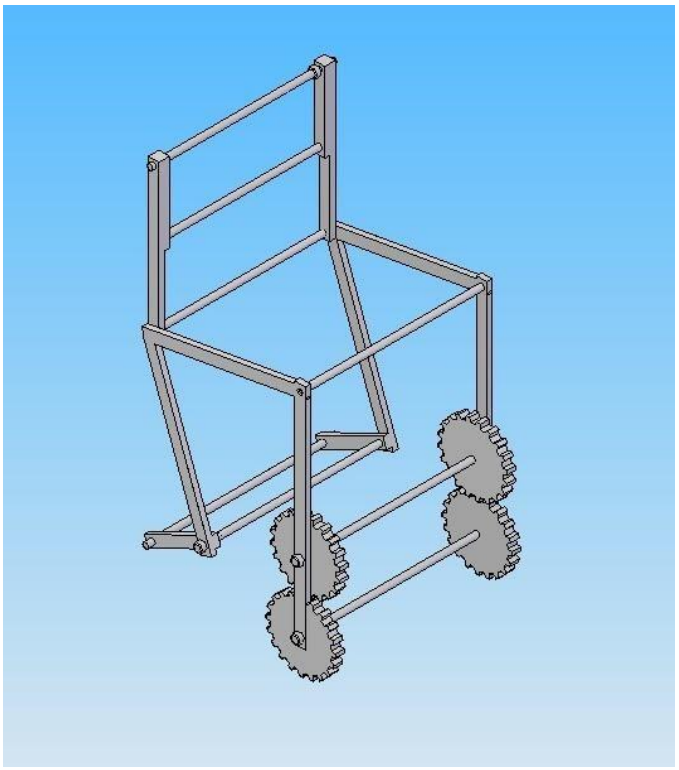

Fig. 10 Synthesized Eight Link Gear Mechanism Model in Two Parallel Planes and Isometric Representation in Solid Edge

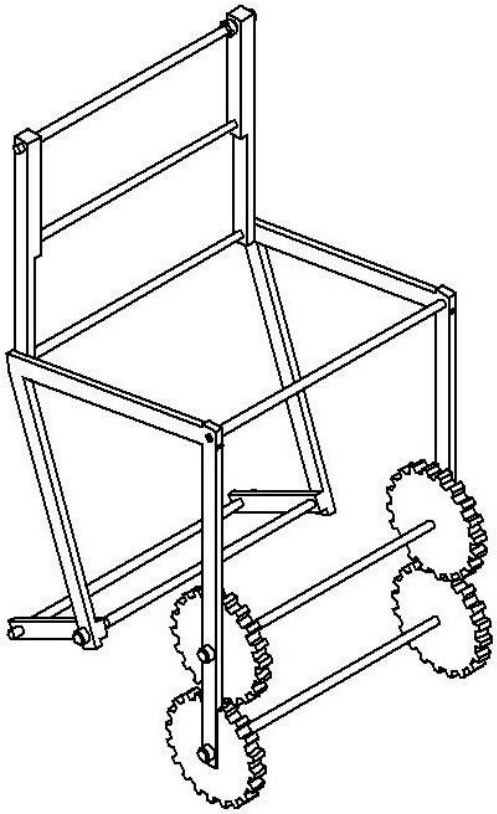

Fig. 11 Synthesized Eight Link Gear Mechanism Model in Two Parallel Planes and Wire Frame Representation in Solid Edge

4. FUTURE PERSPECTIVE OF MODELING THE SYNTHESIZED MECHANISM IN SOLID EDGE

The present paper on Solid Edge 3D Model of Synthesized Eight Link Gear Variable Topology Mechanism explains clearly that, a mechanism synthesized can be modeled in solid edge software to create different views of the design. Thus the models created can be exported to any of the analysis and simulation aspects and the work can be extended. The isometric view provides an insight among the design engineers so as to apply the parallel plane mechanism assembly to any of the existing earth moving equipments to carry out various tasks.

5. CONCLUSION

A study of modeling aspects of eight link gear variable topology mechanism with the aid of solid edge software predicts that, any synthesized mechanism can be taken into consideration for

modeling. In order to visualize the working condition of the mechanism simulation can also be considered. The pictorial prediction of characteristics helps any designer to verify the observations and to develop a perfect operating mechanism.

References

[1] Shrinivas S. Balli and Satish Chand, "Synthesis of a five-bar mechanism with variable topology for motion between extreme positions (SYNFBVTM)," *Mechanism and Machine Theory*, vol. 36, no.10, pp. 1147–1156, 2001.

[2] Shrinivas S. Balli and Satish Chand, "Five-bar motion and path generators with variable topology for motion between extreme positions," *Mechanism and Machine Theory*, vol. 37, no. 11, pp. 1435–1445, 2002.

[3] Shrinivas S. Balli and Satish Chand, "Synthesis of a planar seven-link mechanism with variable topology for motion between two dead-center positions," *Mechanism and Machine Theory*, vol.38, no. 11, pp. 1271–1287, 2003.

[4] G. M. Gadad, Umesh M. Daivagna and Shrinivas S. Balli, "Triad and dyad synthesis of planar seven-link mechanisms with variable topology", *National Conference on Machines and Mechanisms* (NaCoMM '05), pp. 67–73, 2005.

[5] Umesh M. Daivagna and Shrinivas S. Balli, "FSP Synthesis of an off-set five bar-slider mechanism with variable topology", *National Conference on Machines and Mechanisms* (NaCoMM '07), pp. 345–350, 2007.

[6] Ren-Chung Soong, Kuei-Shu Hsu and Feng-Tsai Weng, "A Programmable Geared Seven-bar Mechanism for Mechanical Forming Presses", *Journal of the Chinese Society of Mechanical Engineers*, Vol.29, No.1, pp.61-67, 2008.

[7] Umesh M. Daivagna and Shrinivas S. Balli, "Synthesis of a Seven-Bar Slider Mechanism with Variable Topology for Motion between Two Dead-Center Positions", *World Congress on Engineering*, Vol. II, pp. 1454-1459, 2010.

[8] Volken Parlaktas, Eres Soylemez and Engin Tanik, "On the synthesis of a geared four-bar mechanism", *Mechanism and Machine Theory*, Vol.45, Issue 8, August 2010.

[9] Umesh M. Daivagna and Shrinivas S. Balli, "Synthesis of Five-Bar Slider Mechanism with Variable Topology for Finitely Separated Positions", *Advances in Mechanical Engineering*, vol.2011, 2011.

[10] Prashant B. Tadalagi and Shrinivas S. Balli, "A Review on Mechanisms with Variable Topology (Revisiting the Variable Topology Mechanism)", *IOP Conf. Series: Materials Science and Engineering*, Vol. 691, pp. 012047(1-9), 2019.

[11] H. M. Naveen, Shrinivas S. Balli and Umesh M. Daivagna, "Two FSP Synthesis of Eight Link Gear Mechanism for Motion Generation with 9R-1G Joints", *International Journal of Engineering Applied Science and Technology*, Vol. 5, No. 3, pp. 288-294, 2020.

[12] H. M. Naveen, Shrinivas S. Balli and Umesh M. Daivagna, "Kinematic Synthesis of In-Line Ten Link Gear Slider Mechanism of Variable Topology with 12R-1G-1P Joints", *International Research Journal of Engineering and Technology*, Vol. 7, No. 8, pp. 605-610, 2020.

[13] Prashant B. Tadalagi and Shrinivas S. Balli, "Limiting Positions Synthesis of Seven Bar Slider Automated Fiber Placement Mechanism for Motion Generation using Variable Topology", *International Journal of Mechanical and Production Engineering Research and Development (IJMPERD)*, Vol. 10, Issue 3, pp. 13297–13308, 2020.

[14] H. M. Naveen, Shrinivas S. Balli and Umesh M. Daivagna, "Study of Characteristic Behavior of Synthesized Variable Topology Mechanism using Linkage Software", *GIS Science Journal*, Vol. 7, No.8, pp. 160-166, 2020.

[15] H. M. Naveen, Shrinivas S. Balli and Umesh M. Daivagna, "Functional Aspects of Synthesized In-Line Ten Link Gear Slider Mechanism of Variable Topology using Linkage Software", *International Research Journal of Engineering and Technology,* Vol. 7, No.9, pp. 3281-3286, 2020.

[16] H. M. Naveen, Shrinivas S. Balli and Umesh M. Daivagna, "Possible Configurations and Coupler Curves of Eight Link Gear Variable Topology Mechanism in Phase III Operating Condition", *International Research Journal of Engineering and Technology,* Vol. 7, No. 11, pp. 502-509, 2020.

[17] H. M. Naveen, Shrinivas S. Balli and Umesh M. Daivagna, "Alternative Approaches in Variable Topology as Applied to Degree(s) of Freedom and Modes of Operation in Mechanisms", International Journal of Advances in Engineering and Management, Vol. 2, No. 9, pp. 442-449, 2020.

[18] H. M. Naveen, Shrinivas S. Balli and Umesh M. Daivagna, "Transmission Angles in Synthesized Eight Link Gear Mechanism of Variable Topology with Characteristic Output", International Journal of Engineering Sciences & Research Technology, Vol. 10, Issue 2, pp: 60-68, 2021.